SOLARTECH

WHERE SOLAR MEETS ART & TECHNOLOGY

JH Solar

Marshall islands supercapacitor energy storage

Overview

As the world races toward renewable energy, this island nation is eyeing electromagnetic energy storage solutions like a sailor spotting land after months at sea. With 98% of its electricity historically coming from imported diesel, the Marshalls face an energy crisis that makes continental power.

As the world races toward renewable energy, this island nation is eyeing electromagnetic energy storage solutions like a sailor spotting land after months at sea. With 98% of its electricity historically coming from imported diesel, the Marshalls face an energy crisis that makes continental power.

y Company(MEC) and private companies. MEC is responsible for on-grid and off-grid electricity generation,transmission,and distribution throughout ble to the impacts of cl ls are th ll Islands is a small,remote country. It comprises 29 atollsand five islands with a total land area of 181 square.

Marshall islands supercapacitor energy storage

Supercapacitors as energy storage devices

What are supercapacitors? Supercapacitors are a type of energy storage device that is superior to both batteries and regular capacitors. They have a greater capacity for energy storage than ...

Super capacitors for energy storage: Progress, applications and

ABSTRACT Nowadays, the energy storage systems based on lithium-ion batteries, fuel cells (FCs) and super capacitors (SCs) are playing a key role in several ...

marshall islands mobile energy storage system composition ...

In this paper, we propose a hybrid solid gravity energy storage system (HGES), which realizes the complementary advantages of energy-based energy storage (gravity energy storage) and ...

Marshall Islands energy storage capacitor

Nowadays, the energy storage systems based on lithium-ion batteries, fuel cells (FCs) and super capacitors (SCs) are playing a key role in several

applications such as power generation,

Electrochemical Energy Storage ...

Great energy consumption by the rapidly growing population has demanded the development of electrochemical energy storage devices with high power density, high energy density, and long ...

Marshall islands energy storage dc capacitors

The high energy storage, pulse-discharge capacitors are designed and built in the U.S. with voltage ratings up to 100 kV and peak discharge current ratings of up to 250 kA.

marshall islands energy storage supercapacitor brand

Supercapacitors has seen deployment in all renewable energy sectors including solar, wind, tidal where supercapacitors are used for both energy harvesting and delivery.

Journal of Energy Storage

Supercapacitors have received wide attention as a new type of energy storage device between electrolytic capacitors and batteries [2]. The performance improvement for ...

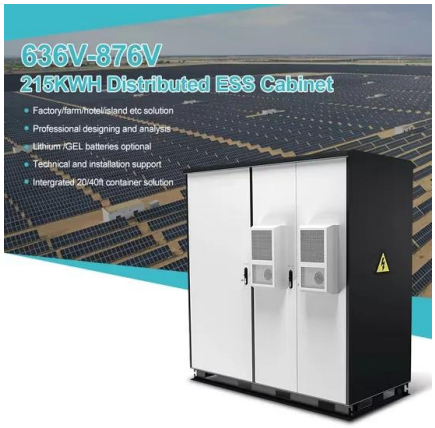

Supercapacitors for renewable energy applications

A short term storage device can be used to suppress the fluctuation of wind power in this frequency band. Therefore, a storage device which is capable of realizing its ...

Marshall Islands Supercapacitor Market (2024-2030) , Value

Historical Data and Forecast of Marshall Islands Supercapacitor Market Revenues & Volume By Energy for the Period 2020-2030 Historical Data and Forecast of Marshall Islands ...

ETI Energy Snapshot

Prepared by the National Renewable Energy Laboratory (NREL), a national laboratory of the U.S. Department of Energy, Office of Energy Efficiency and Renewable Energy; NREL is operated ...

Electrochemical Supercapacitors for Energy Storage and ...

In today's world, clean energy storage devices, such as batteries, fuel cells, and electrochemical capacitors, have been recognized as one of the next-generation technologies ...

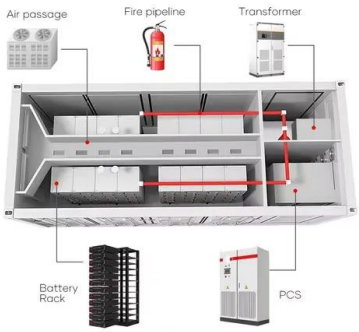

Marshall Islands Electrochemical Energy Storage System ...

marshall islands supercapacitor energy storage system This study suggests a novel investment strategy for sizing a supercapacitor in a Battery Energy Storage System (BESS) for frequency ...

Energy Snapshot

This document was developed by the National Renewable Energy Laboratory. The information included in this document is for general information purposes only. While reasonable attempts ...

Comoros Supercapacitor Energy Storage: Powering the Islands' ...

Why Comoros Needs Supercapacitors: More Than Just a "Battery Band-Aid" a power outage hits Moroni during peak market hours. Vendors scramble, ice melts, and freshly ...

Marshall islands energy storage subsidy

RMI Energy Future The future of the Marshall Islands electricity system depends on upgrading the electricity network, getting better at energy efficiency, and replacing diesel generation with ...

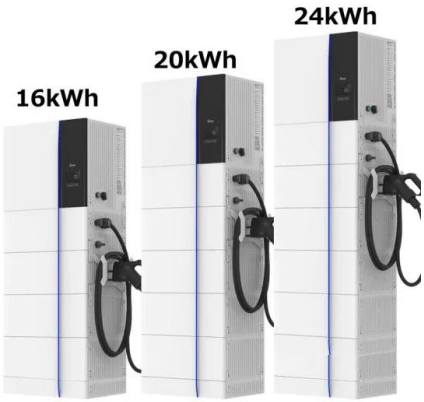

How the Marshall Islands Are Leveraging Farad Energy Storage ...

Well, the Marshall Islands' Energy Office sort of struck gold with these modular capacitor banks. Unlike conventional batteries that store energy chemically, Farad systems use double-layer ...

Supercapacitors for renewable energy applications

A short term storage device can be used to suppress the fluctuation of wind power in this frequency band. Therefore, a storage device which is capable of realizing its energy in a short interval of time has many ...

Supercapacitors: Properties and applications

Energy accumulation and storage is one of the most important topics in our times. This paper presents the topic of supercapacitors (SC) as energy storage devices. ...

marshall islands supercapacitor energy storage system

Nowadays, the energy storage systems based on lithium-ion batteries, fuel cells (FCs) and super capacitors (SCs) are playing a key role in several applications such as power generation, ...

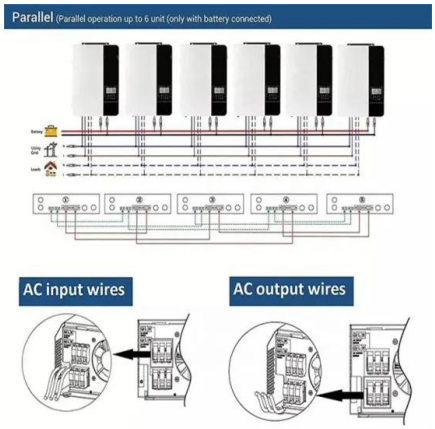

Marshall islands energy storage power

Majuro, Marshall Islands - The Asian Development Bank (ADB) and the Republic of Marshall Islands (RMI) have officially launched a groundbreaking $17 million energy transition project ...

Supercapacitor vs lithium ion battery Marshall Islands

Supercapacitors, or ultracapacitors, are energy storage devices that store energy through electrostatic fields. Unlike traditional batteries, which rely on electrochemical reactions, ...

National Energy Office

ENERGY SECTOR VISION "An improved quality of life for the people of the Marshall Islands through clean, reliable, affordable, accessible, environmentally appropriate and sustainable ...

Falkland Islands supercapacitor storage system

As the photovoltaic (PV) industry continues to evolve, advancements in Falkland Islands supercapacitor storage system have become critical to optimizing the utilization of renewable ...

Super capacitors for energy storage: Progress, applications and

Nowadays, the energy storage systems based on lithium-ion batteries, fuel cells (FCs) and super capacitors (SCs) are playing a key role in several applications such as power ...

Supercapacitors

Supercapacitors A supercapacitor, also known as an ultracapacitor or electric double-layer capacitor (EDLC), is an energy storage device that bridges the gap between conventional capacitors and batteries. Unlike batteries, ...

SUPERCAPACITOR ENERGY STORAGE SYSTEM

Abstract: A new technology, the Supercapacitor, has emerged with the potential to enable major advances in energy storage. Supercapacitors are governed by the same fundamental ...

Marshall Islands Air Energy Storage Module: Powering Paradise ...

Why This Tiny Nation Is Making Big Waves in Energy Storage a tropical archipelago where coconut trees sway alongside cutting-edge air energy storage modules. Welcome to the ...

Home

What are Supercapacitors? Supercapacitors are the most advanced energy storage devices in the world. Combining the qualities of capacitors with the most advanced batteries, supercapacitors have a 10X lifespan over ...

Supercapacitors for energy storage applications: Materials, ...

Supercapacitors, also known as ultracapacitors or electrochemical capacitors, represent an emerging energy storage technology with the potential to complement or ...

Supercapacitor energy storage system Cook Islands

Are supercapacitor Batteries A drawback? However,batteries suffer from a drawback in terms of low power density. In recent years,supercapacitor devices have gained significant traction in ...

A review of supercapacitors: Materials, technology, challenges, ...

This review study comprehensively analyses supercapacitors, their constituent materials, technological advancements, challenges, and extensive applications in renewable ...

Supercapacitors as next generation energy storage devices: ...

Supercapacitors are considered comparatively new generation of electrochemical energy storage devices where their operating principle and charge storage mechanism is more ...

Cook Islands Energy Storage: How Supercapacitors Are ...

You're sipping coconut water on a pristine Cook Islands beach when suddenly - the power goes out. Traditional energy storage can't keep up with paradise's demands. Enter ...

Contact Us

For catalog requests, pricing, or partnerships, please visit: https://www.apartamenty-teneryfa.com.pl